Analog Devices Products and Signal Chain Solutions for

Motor Control Systems and Design

Analog Devices' Motor Control Mission Statement

ADI is positioned to deliver the most innovative motor control market solutions that offer the best in system efficiency, reliability, and connectivity by focusing its efforts on the highest system performance and industry-leading integration. With ADI's extensive motor control system-level knowledge and strategic technology partner alliances, ADI will be able to provide customers with unique system services and products leading the way to becoming a long-term technology partner.

www.analog.com/motorcontrol

ANALOG DEVICES

Table of Contents

Introduction 3

Typical Motor Control Systems with Functional Descriptions 4

Isolation with *i*Coupler® Technology

Isolated Gate Drivers 5

Isolated Σ-Δ Modulators 5

Standard Data Isolators 6

Isolated Communications Transceivers 6

*iso*Power® Integrated, Isolated DC-to-DC Converters 7

Power Management

Digital Power 8

High Speed MOSFET Drivers 8

Switching/Multirail Regulators 9

Linear Regulators 9

Position and Current Sensing

Simultaneous Sampling ADCs 10

Resolver-to-Digital Converters 10

Processors and FPGA

Mixed-Signal Control Processors 11

DSPs 12

FPGA Solutions 13

Standard Linear

Current Sense Amplifiers 14

Difference Amplifiers 15

Precision Op Amps 15

Precision References 15

Reference Designs 16

Model-Based Design 17

Motor Control Architectures and Solutions 18

Strategic Partnerships and Alliances 19

Online Tools and Resources 20

Introduction

More Stringent Energy Regulations Drive Motor Control Innovations

In today's expanding industrial marketplace, the demand for electrical power is growing at an unprecedented rate. More than 40% of that electrical demand comes from industrial electric motors of all sizes. Because of that phenomenon, governments and certification agencies worldwide are introducing new regulatory legislation and more stringent energy efficiency requirements on electric motor OEMs and end users. Like many great technological innovations, there needs to be a pressing demand in the market for change.

Analog Devices recognized years ago that this new era of smarter and highly efficient motor control systems would be the new standard for the motor control industry. As part of that recognition, ADI embarked on an integrated and comprehensive motor control design program in collaboration with our strategic partners, who are experts in their respective fields (MathWorks,® ARM,® Boston Engineering,® IAR® systems, and Xilinx®), aimed at addressing the entire system architecture to achieve the greatest level of efficiency while improving system accuracy and reliability.

By taking a system-level view (see Figure 1) of these new challenges, ADI was able to develop products that not only exceeded the individual performance specifications but also represented the optimal interface between other functional blocks of the circuit. This system solution approach enables ADI to offer industrial-based customers a completely integrated solution that fits their specific needs while helping them meet the new, more stringent energy regulations.

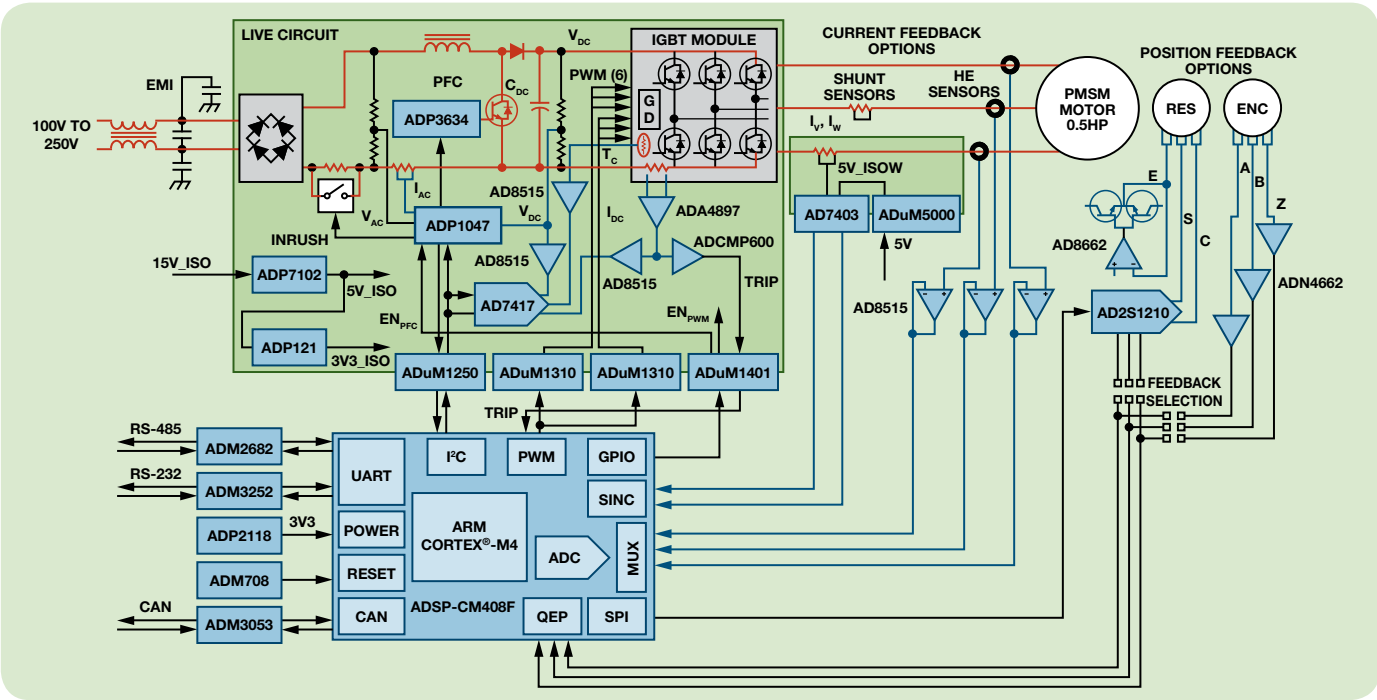

Figure 1. Complete system-level motor control solution capabilities.

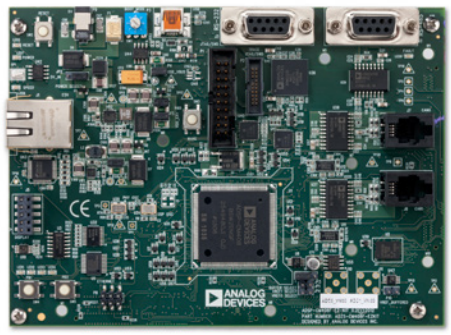

ADSP-CM408F motor drive control board (EZ-KIT®).

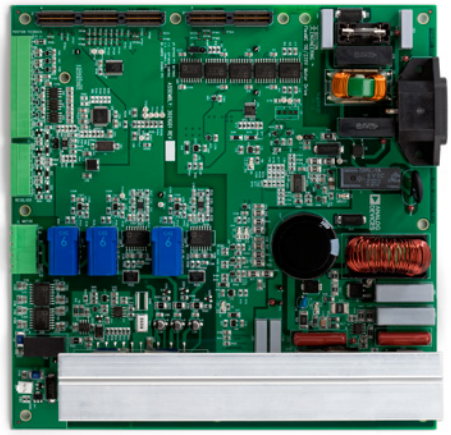

Motor drive power board.

For additional information go to *www.analog.com/motorHV*.

Typical Motor Control System Offering

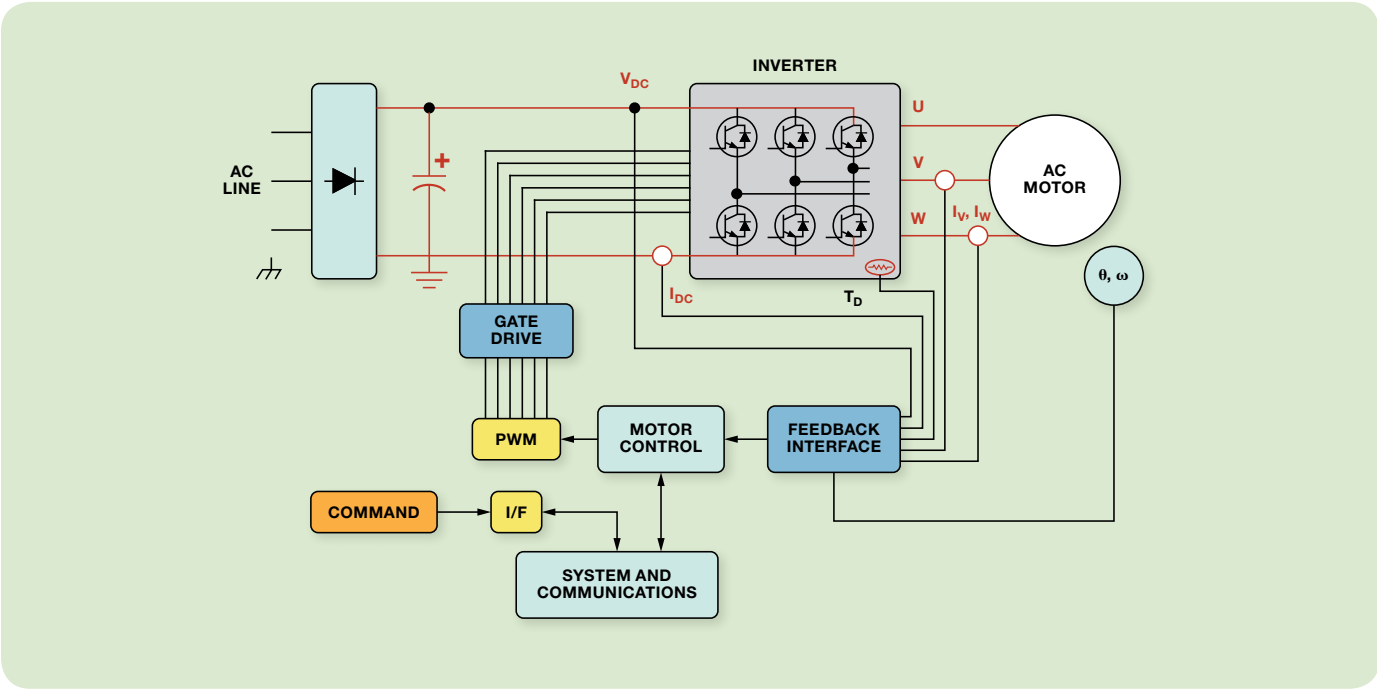

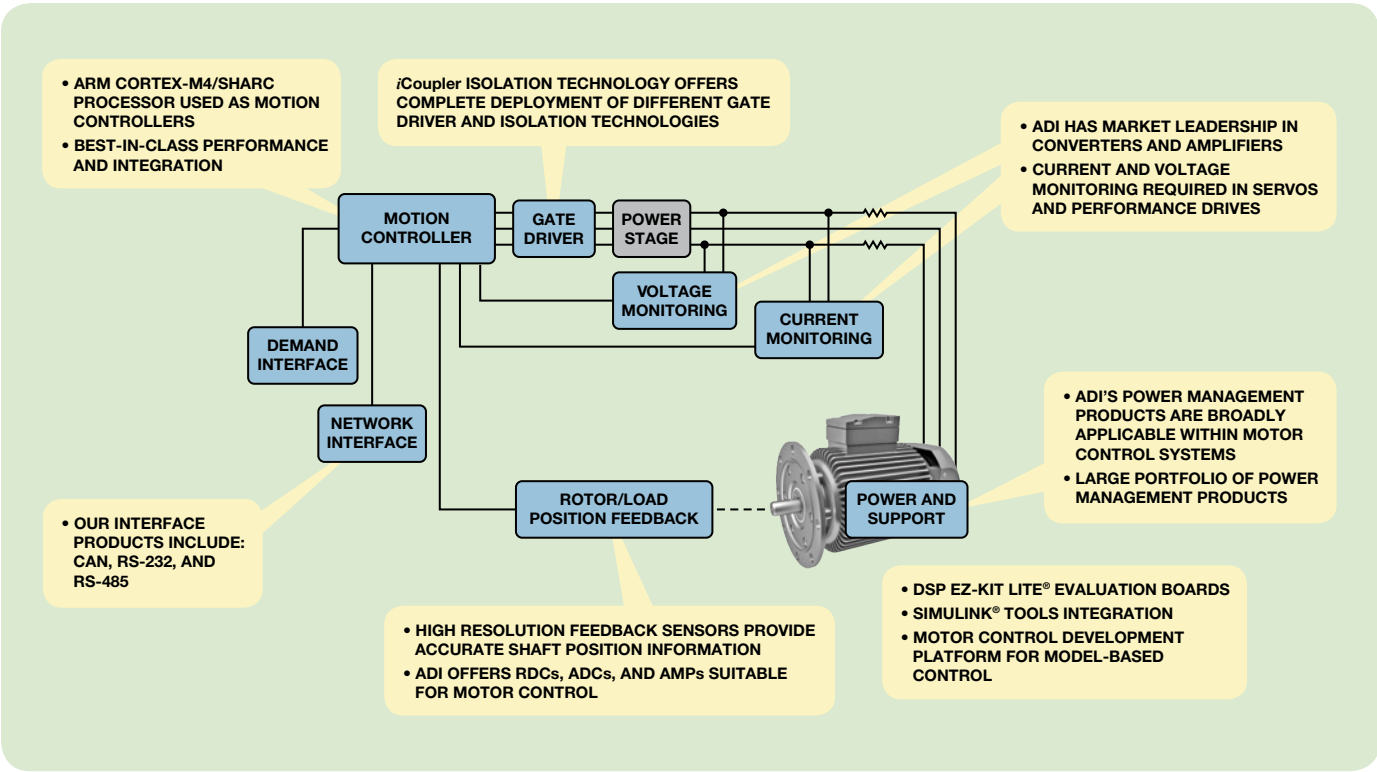

Digital Isolation with *i*Coupler Technology

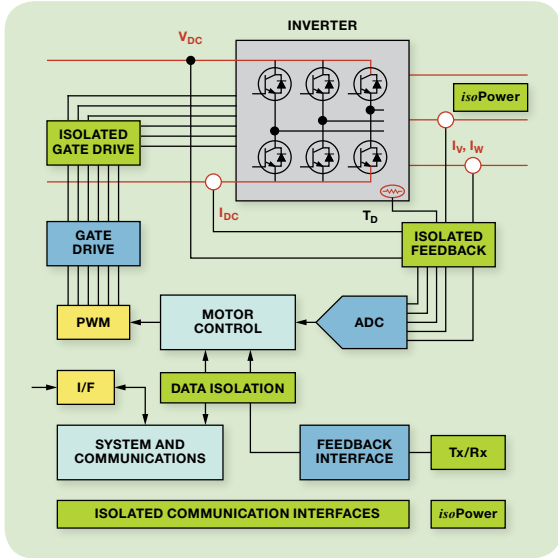

The *i*Coupler Transformer Isolation Advantage

- Smaller size
- Lower cost at high performance
- Lower power consumption
- Integrate with other functions
- *iso*Power
- Higher reliability

Safety and Standards

- Basic and functional safety
  - IEC60664, IEC61800-5-x
- Reinforced isolation
  - VDE-0884-10, IEC60747-5-5
  - UL1577
- 1200 V_{PEAK} working voltage
- Guaranteed 8 mm creepage

Isolated Gate Drivers

Overcoming Limitations of Optocouplers and High Voltage Gate Driver Solutions

Isolated gate drivers provide electrical isolation as well as strong gate drive capability, which is often required for safety and robustness in many system architectures. The isolated gate driver portfolio from Analog Devices offers designers performance and reliability advantages over designs utilizing optocouplers or pulse transformers. Utilizing ADI's proven *i*Coupler® technology, the isolated gate driver family offers the advantage of a maximum propagation delay of 50 ns, less than 5 ns channel-to-channel matching, a 50-year lifetime for 400 V rms working voltage, and galvanic isolation in a single package.

Part Number	Insulation Rating (kV rms)	Max Operating Temperature (°C)	Isolated Output (V) Max	Isolated Output (V) Min
ADuM7223	2.5	125	18	4.5
ADuM3223	3	125	18	4.5
ADuM4223	5	125	18	4.5
ADuM3221	2.5	125	18	4.5
ADuM3220	2.5	125	18	4.5
ADuM7234	1	105	18	12

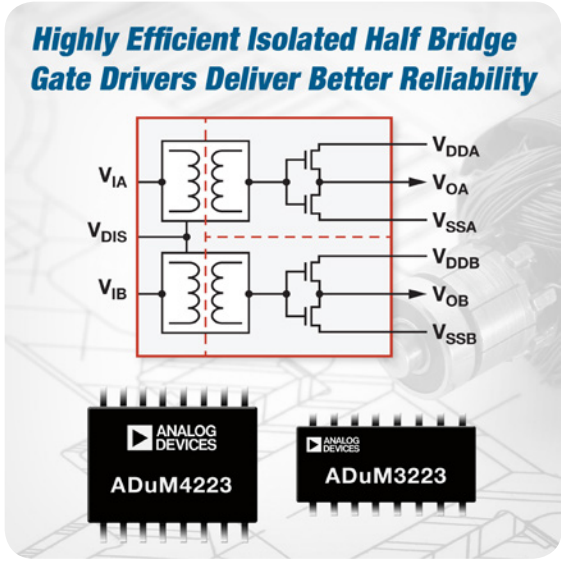

Isolated Σ-Δ Modulators—Voltage and Current Sensing

The AD7403 is the industry's highest performance isolated Σ-Δ modulator enabling even more accurate current and voltage sense feedback. Wider dynamic range enables the use of smaller shunts, improving system efficiency and motor to drive matching. Superior modulator performance coupled with an external clock of 20 MHz provides flexibility in performance/latency trade-offs in applications such as robotics where dynamic response is important. The AD7403 also features an isolation scheme with a higher continuous working voltage (V_{IORM}) than the previous generation and is offered in packages providing 8.3 mm creepage and clearance.

Part Number	Clock (MHz)	V_{IORM} (V_{PEAK})	Package
AD7400A	10 (int)	848	16-lead SOIC_W
AD7401A	20 (ext)	848	16-lead SOIC_W
AD7403	20 (ext)	1250	16-lead SOIC_IC, 8-lead SOIC_IC,
AD7402	10 (int)	1250	16-lead SOIC_IC, 8-lead SOIC_IC,
AD7405	20 (ext) LVDS	1250	16-lead SOIC_IC

Standard Data Isolators

Digital Isolators Deliver Peak Performance Without Compromise

Digital isolators with *i*Coupler technology enable designers to implement isolation in designs without the cost, size, power, performance, and reliability constraints found with optocouplers. With more than one billion channels shipped into the field, these magnetically isolated products are a safe, reliable, and easy to use alternative to optocouplers.

Channel Count	Insulation Rating (kV rms)	Max Data Rate (Mbps)	Max Operating Temperature (°C)
1	2.5	Up to 100	Up to 125
2	2.5, 3.75, 5	Up to 100	Up to 125
3	2.5	Up to 90	Up to 125
4	2.5, 3.75, 5	Up to 150	Up to 125
5	1, 2.5	10	105
6	1	25	105

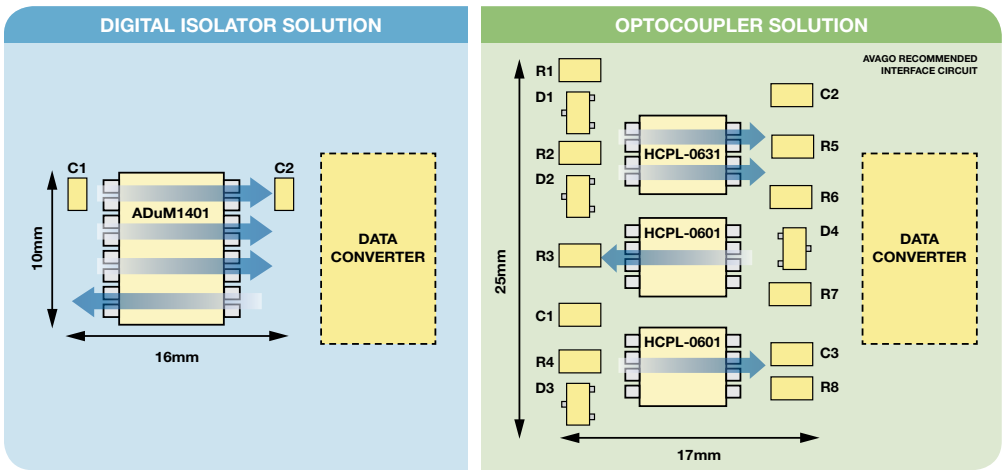

Isolated RS-485 Transceivers for Intersystem Communication in Motor Control

These isolated transceivers integrate Analog Devices *i*Coupler technology to combine a 3-channel isolator, a three-state differential line driver, a differential input receiver, and Analog Devices *iso*Power dc-to-dc converter into a single package. The devices are powered by a single 5 V or 3.3 V supply, realizing a fully integrated signal and power isolated RS-485 solution. The parts are fully specified over the industrial temperature range and are available in a highly integrated, 16-lead, wide-body SOIC package with >8 mm creepage and clearance. These devices enable designers to isolate communications in design without the cost, size, power, and reliability constraints found with traditional isolation products.

Part Number	Insulation Rating (kV rms)	ESD Protection (kV)	Data Rate RS-485	Power Supply (V_{NOM})
ADM2682E	5	15	16 Mbps	3.3, 5
ADM2687E	5	15	500 kbps	3.3, 5
ADM2582E	2.5	15	16 Mbps	3.3, 5
ADM2587E	2.5	15	500 kbps	3.3, 5

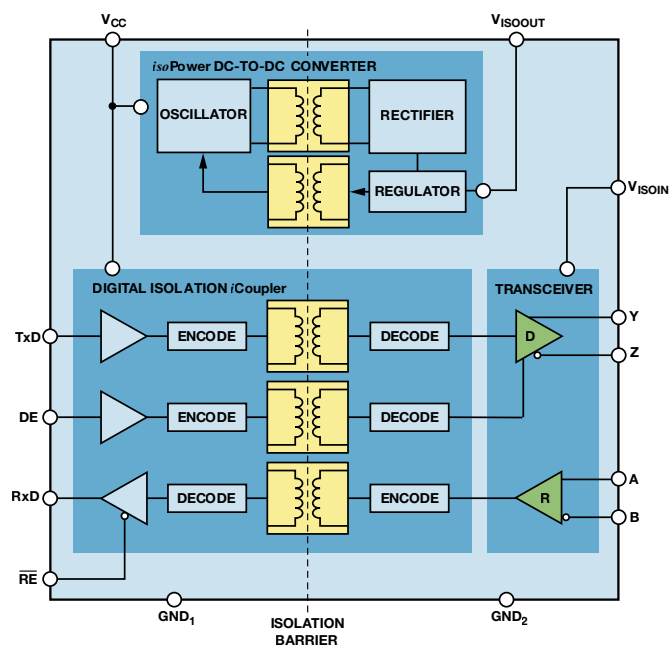

*iso*Power Integrated, Isolated DC-to-DC Converters

These isolated dc-to-dc converters expand ADI's isolated power portfolio by providing designers with a compact, easy to implement, cost-effective approach to meeting both isolated power and data requirements. The combination of size and output power also addresses the growing space and power constraints engineers must consider when designing motor drives.

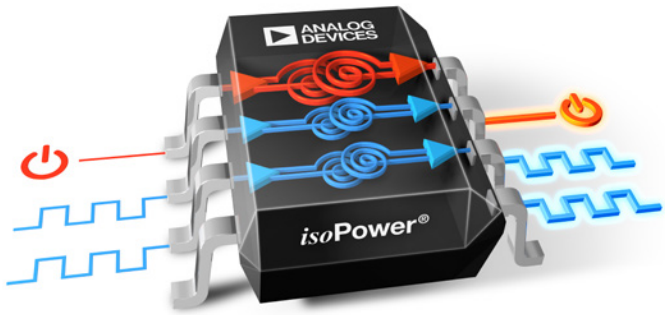

Part Number	Insulation Rating (kV rms)	Max Data Rate (Mbps)	Propagation Delay (ns)	Isolated Output Supply (mA)	Isolated Output (V) Min
ADM3260	2.5	1	95	30	4.5
ADuM5000	2.5	—	—	100	3.3
ADuM5200	2.5	25	60	100	3.3
ADuM5400	2.5	25	60	100	3.3
ADuM6000	5	—	—	100	3.3
ADuM6200	5	25	60	100	3.3
ADuM6400	5	25	60	100	3.3

The *iso*Power Difference

DC-to-DC module.

isoPower solution.

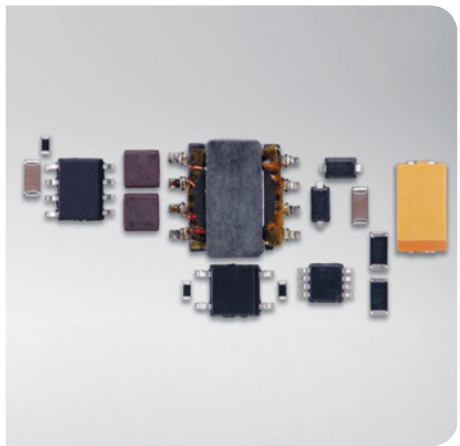

Optocoupler design.

Digital Power Factor Correction with PMBus for Motor Control Systems

Motor control systems are increasingly migrating from passive harmonic correction inductors to active power factor correction (PFC) systems to improve total harmonic distortion (THD), reduce system size and weight, and improve efficiency of single-phase and 3-phase designs.

The ADP1047 and ADP1048 digital power factor correction series offer versatile controllers with input power metering capability to ±1% accuracy. The ADP1047 is a single-phase device, while the ADP1048 is an interleaved controller that can also be configured as a bridgeless PFC for high system efficiency. The ADP1047/ADP1048 can be programmed using the easy to use graphic user interface (GUI) with programming implementation in hardware state machine for robust and reliable motor control PFC solutions. The PMBus™ interface allows parameters to be adjusted and reported, including the accurate measurement of input voltage, current, power, and temperature. The ADP1047/ADP1048 PFC family can communicate with motor controllers, such as ADSP-CM408F, to optimize efficiency and motor control system performance.

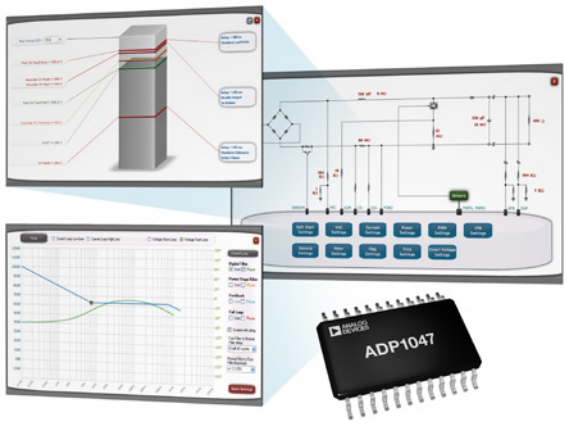

Intuitive graphical user interface simplifies programming.

Part Number	Description	Key Features	V_{IN} (V)	Interface	EEPROM	PWM Outputs	Housekeeping I/O	Protection	Package
ADP1047	Single-phase PFC controller with accurate power metering	Inrush control, real-time efficiency optimization, enhanced dynamic response, synchronization, and spread spectrum	3.3	I^2C/PMBus	Yes	2	PSON, inrush control, ACOK, PGOOD	Programmable ac fault detection, OCP, OVP, OTP	24-lead QSOP
ADP1048	Interleaved PFC controller with accurate power metering; capable of supporting high efficiency bridgeless topology	Inrush control, real-time efficiency optimization, enhanced dynamic response, synchronization, spread spectrum, and light load shedding	3.3	I^2C/PMBus	Yes	2	PSON, inrush control, ACOK, PGOOD	Programmable ac fault detection, OCP, OVP, OTP	24-lead QSOP

PFC Evaluation Tools and Software

Evaluation boards can be ordered and the GUI can be downloaded free of charge from *analog.com*. There are a number of reference designs, applications notes, and video guides to get started:

- ADP1047 300 W interleaved evaluation board—ADP1048_600_EVALZ
- ADP1048 600 W interleaved evaluation board—ADP1047_300_EVALZ
- ADP1048 bridgeless reference design
- GUI and user guides available from *analog.com*

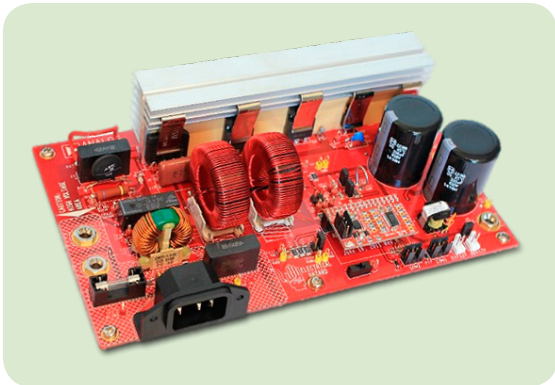

ADP1048 600 W interleaved evaluation board.

High Speed MOSFET Drivers

The ADP36xx family of 2 A and 4 A high speed FET drivers complement the ADP1047/ADP1048 digital PFC controllers. These devices use a standard industry footprint but add faster switching performance and advanced protection features.

Part Number	Description	V_{IN} (V)	Peak Drive Current (A)	Precision Enable/Shutdown	OT Protection	OT Warning Signal	Package
ADP3654	Dual noninverting	4.5 to 18	4	No	No	No	8-lead MSOP_EP 8-lead SOIC_N_EP
ADP3633/ADP3634/ADP3635 ADP3623/ADP3624/ADP3625	Dual inverting (33), dual noninverting (34), invert/noninvert (35)	9.5 to 18 4.5 to 18	4	Yes	Yes	Yes	8-lead MSOP_EP 8-lead SOIC_N_EP
ADP3629/ADP3630/ADP3631	Dual inverting (29), dual noninverting (30), invert/noninvert (31)	9.5 to 18	2	Yes	Yes	Yes	8-lead MSOP_EP 8-lead SOIC_N

Integrated Regulators Devices Delivering Best-in-Class Efficiency, System Performance, and Size

ADI regulator products for motor control offer a selection of power integrated point of load (POL) devices supporting a wide range of power distribution options. This includes standalone switch regulators with 5 V, 12 V, and 24 V process to multirail solutions that support load requirements from the milliamperes to multiple ampere loads while maintaining effective efficiency and performance; to linear regulators offering low noise solutions that help increase precision in fine position sensing applications.

Switching/Multirail Regulators

Part Number	Product Description	V_{IN} Range (V)	I_{OUT} Max (A)
ADP2119	1.2 MHz synchronous step-down dc-to-dc regulator	2.3 to 5.5	2
ADP2120	1.2 MHz synchronous step-down dc-to-dc regulator	2.3 to 5.5	1.25
ADP2164	High efficiency synchronous step-down dc-to-dc regulator with selectable switching frequency (600 kHz or 1.2 MHz)	2.7 to 6.5	4
ADP230x	Nonsynchronous step-down switching regulator	3.0 to 20	ADP2300/ ADP2301: 1.2, ADP2302: 2, ADP2303: 3
ADP2370	1.2 MHz/600 kHz low quiescent current step-down dc-to-dc regulator	3.2 to 15	0.8
ADP2384	Synchronous step-down dc-to-dc regulator with programmable switching frequency	4.5 to 20	4
ADP2386	Synchronous step-down dc-to-dc regulator with programmable switching frequency	4.5 to 20	6
ADP2441	Synchronous step-down dc-to-dc regulator with adjustable switching frequency 300 kHz to 1 MHz	4.5 to 36	1
ADP5024	3-channel regulator with dual 3 MHz switching regulator and one LDO	Switches: 2.3 to 5.5, LDO: 1.7 to 5.5	Switches: 1.2 each, LDO: 0.300
ADP5134	4-channel regulator with dual 3 MHz switching regulator and dual LDO	Switches: 2.3 to 5.5, LDOs: 1.7 to 5.5	Switches: 1.2 each, LDOs: 0.300
ADP5052	5-channel integrated power solution with quad step-down synchronous switching regulators and one LDO	Switches: 4.5 to 15, LDOs: 1.7 to 5.5	Switches: 4, 4/1.2, 1.2, LDO: 0.200

ADP5134 Micro PMU Advantages

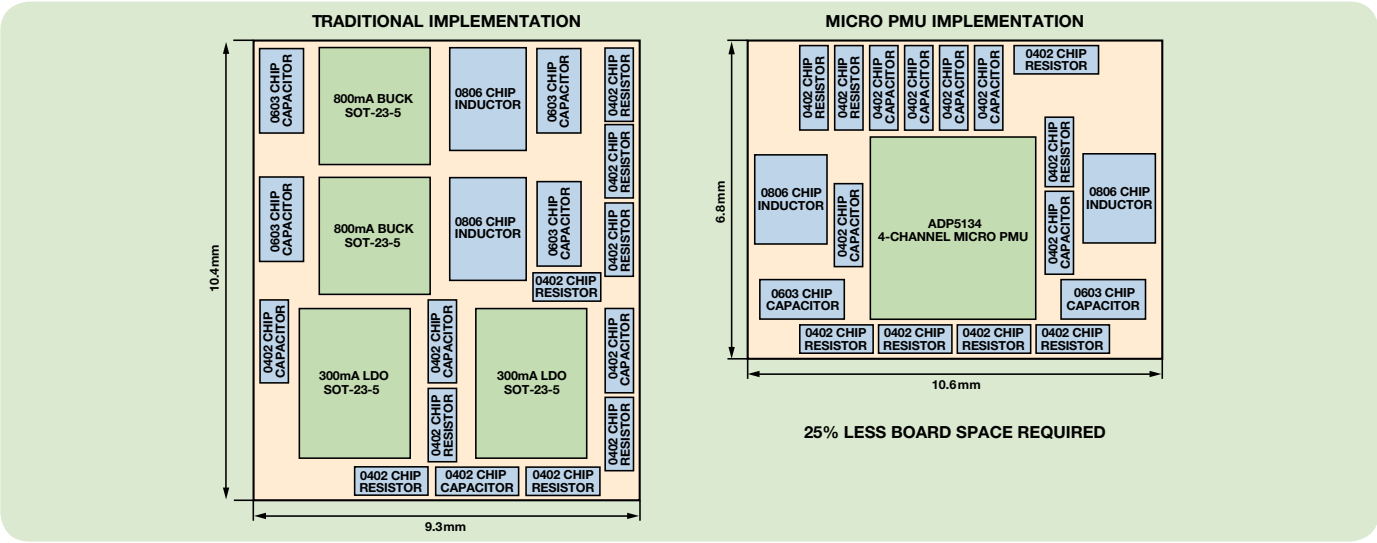

Linear Regulators

Part Number	Product Description	V_{IN} Range (V)	I_{OUT} Max (A)
ADP151	Ultralow noise CMOS linear regulator	2.2 to 5.5	0.2
ADP7102/ADP7104	Low noise CMOS LDO	3.3 to 20	ADP7102: 0.300 ADP7104: 0.500
ADP7105	Low noise CMOS LDO with soft start	3.3 to 20	0.5
ADP7118	Low noise CMOS LDO	2.7 to 20	0.2
ADP7142	Low noise, high PSRR CMOS LDO	2.7 to 40	0.2
ADM7150	Ultralow noise, high PSRR LDO	4.5 to 16	0.8
ADM7170/ADM7171/ ADM7172	Low noise, high PSRR LDO	2.3 to 6.5	0.5/1.0/2.0
ADP124/ADP125	Low quiescent current CMOS linear regulator	2.3 to 5.5	0.5
ADP222/ADP223/ ADP224/ADP225	Dual, low noise, high PSRR linear regulators	2.5 to 5.5	0.300 each
ADP322/ADP323	Triple, low noise, high PSRR linear regulators	2.5 to 5.5	0.200 each
ADP7182	Low noise, negative linear regulator	–2.7 to –28	–0.200

Simultaneous Sampling ADCs

Current, Voltage, and Position Sensing Products

ADI offers an extensive portfolio of simultaneous sampling ADCs incorporating high performance, resolution, and accuracy with multiple channel combinations that serve a variety of motor control feedback and sensing needs. Small packaged dual devices are ideal for position sensing applications such as robotics or for current sensing in space constrained IDMs. Bipolar input devices suit current and voltage feedback in high power applications. Multichannel devices suit the topologies of multiaxis designs while fast conversion times offer low latency resulting in fast dynamic response.

Part Number	No. Simultaneous Channels	Total Channel Count	Sample Rate/Sim Channel	Resolution (Bits)
AD7265/AD7266	2	12	1 MSPS/2 MSPS	12
AD7262/AD7264	2	2	1 MSPS	12/14
AD7352/AD7356/ AD7357	2	2	3 MSPS/ 5 MSPS/4.75 MSPS	10 to 16
AD7656-1/AD7657-1/ AD7658-1	6	6	250 kSPS	16/14/12
AD7606/AD7606-6/ AD7606-4	8/6/4	8/6/4	200 kSPS	16
AD7607/AD7608/ AD7609	8	8	200 kSPS	14/18/18
AD7366/AD7367	2	4	1 MSPS	12/14
ADAS3023	8–8	8	500 kSPS to 125 kSPS	16
AD7902/AD7903	2	2	1 MSPS	16

Resolver-to-Digital Converters

Many motor control systems operate at variable shaft rotation speeds. To provide the most accurate position information, a system with flexible resolution is required. The resolver-to-digital converter that provides resolution change on-the-fly is the AD2S1210. This converter delivers an integrated solution including an excitation oscillator with programmable frequency, programmable threshold levels, very wide analog input range, and information indicating the exact nature of detected faults. The AD2S1210 provides a high level of functionality required to interface to resolvers with a reduced number of external components.

Part Number	Resolution (Bits)	Accuracy (Arcmin)	Max Tracking Rate (rps)
AD2S1200	12	11	1000
AD2S1205	12	11	1250
AD2S1210	10 to 16	2.5	3125

Processors

Processor Value

- ARM and DSP cores
- Strong DMA capability
- Real-time Ethernet (1588)
- High performance/cost ratio

System Value

- Embedded sinc filters for isolated Σ-Δ
- High amount of local RAM and flash
- Fast embedded 16-bit ADCs

Out of Box Experience

- Support of MATLAB® and model-based design
- 230 V_{AC} and 48 V_{DC} development platforms
- Strong local support team

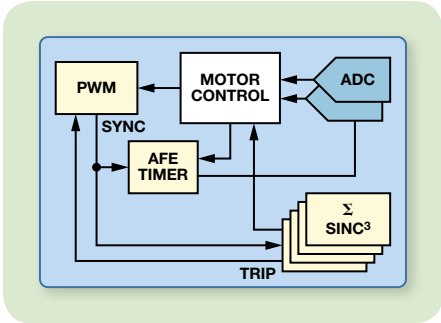

Motor Control ASSPs—ADSP-CM40x Mixed-Signal Processors for High End Drive and Servo Control

ADSP-CM40x mixed-signal processors offer control processing performance combined with high speed, high accuracy analog-to-digital conversion aimed at the needs of next-generation industrial motor drives and servos. Based on the ARM Cortex-M4, the ADSP-CM40x combines industry-leading 240 MHz core clock speed, large 384 kB SRAM, and 2 MB flash memories with industry-leading dual 16-bit ADCs. In addition to its raw digital and analog performance capabilities, the ADSP-CM40x offers a number of features including sinc filters for glueless connection to AD740x Σ-Δ modulators and a harmonic analysis engine for power spectrum analysis.

Model	Package	Speed (MHz)	SRAM/Flash	Dual ADC Accuracy (ENOB)	Comms
ADSP-CM408BSWZ-AF	24 mm × 24 mm, 176-lead LQFP	240	384 kB/2 MB	13	USB, Ethernet
ADSP-CM408BSWZ-BF	24 mm × 24 mm, 176-lead LQFP	240	384 kB/2 MB	13	USB
ADSP-CM407BSWZ-AF	24 mm × 24 mm, 176-lead LQFP	240	384 kB/2 MB	11	USB, Ethernet
ADSP-CM407BSWZ-BF	24 mm × 24 mm, 176-lead LQFP	240	384 kB/2 MB	11	USB
ADSP-CM403BSWZ-CF	14 mm × 14 mm, 120-lead LQFP	240	384 kB/2 MB	13	None
ADSP-CM403BSWZ-EF	14 mm × 14 mm, 120-lead LQFP	150	128 kB/512 kB	13	None
ADSP-CM403BSWZ-FF	14 mm × 14 mm, 120-lead LQFP	100	128 kB/256 kB	13	None
ADSP-CM402BSWZ-EF	14 mm × 14 mm, 120-lead LQFP	150	128 kB/512 kB	11	None
ADSP-CM402BSWZ-FF	14 mm × 14 mm, 120-lead LQFP	100	128 kB/256 kB	11	None

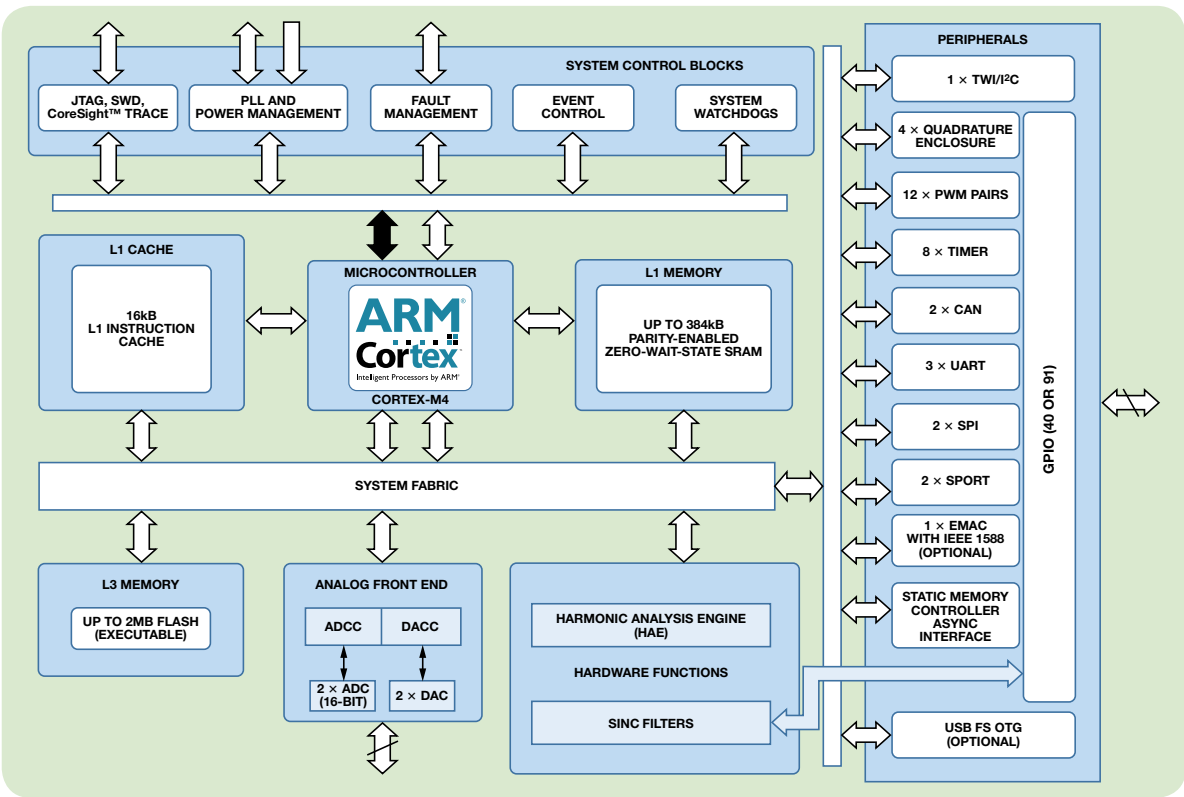

ADSP-214xx SHARC Floating-Point DSPs for Motion Controllers and High End Drive and Servo Control

The SHARC® processor family dominates the floating-point DSP market with exceptional core performance, memory size, memory performance, and cost per MFLOP. As the fourth generation of SHARC 32-bit floating-point DSPs, the ADSP-214xx continues the legacy with unparalleled performance and features. The ADSP-214xx processors incorporate up to 800 MMACs of performance, 5 MB of on chip memory, FFT/FIR/IIR accelerators, and a host of external memory interfaces and peripherals that make these processors well suited for motion controllers and high end motor drive and servo systems.

Model	Package	Speed (MHz)	On-Chip SRAM (MB)	GPIOs	Parallel Interfaces	Accelerators
ADSP-21469BBCZ-3	24 mm × 24 mm, 176-lead LQFP	450	5	34	DDR2, AMI, link ports	FFT/FIR/IIR
ADSP-21489BSWZ-3A	14 mm × 14 mm, 100-lead LQFP	350	5	32	—	FFT/FIR/IIR
ADSP-21489BSWZ-3B	24 mm × 24 mm, 176-lead LQFP	350	5	34	SDRAM	FFT/FIR/IIR
ADSP-21489BSWZ-4A	14 mm × 14 mm, 100-lead LQFP	400	5	32	—	FFT/FIR/IIR
ADSP-21489BSWZ-4B	24 mm × 24 mm, 176-lead LQFP	400	5	34	SDRAM	FFT/FIR/IIR
ADSP-21488BSWZ-3A	14 mm × 14 mm, 100-lead LQFP	350	3	32	—	FFT/FIR/IIR
ADSP-21488BSWZ-3B	24 mm × 24 mm, 176-lead LQFP	350	3	34	SDRAM	FFT/FIR/IIR
ADSP-21488BSWZ-4A	14 mm × 14 mm, 100-lead LQFP	400	3	32	—	FFT/FIR/IIR
ADSP-21488BSWZ-4B	24 mm × 24 mm, 176-lead LQFP	400	3	34	SDRAM	FFT/FIR/IIR

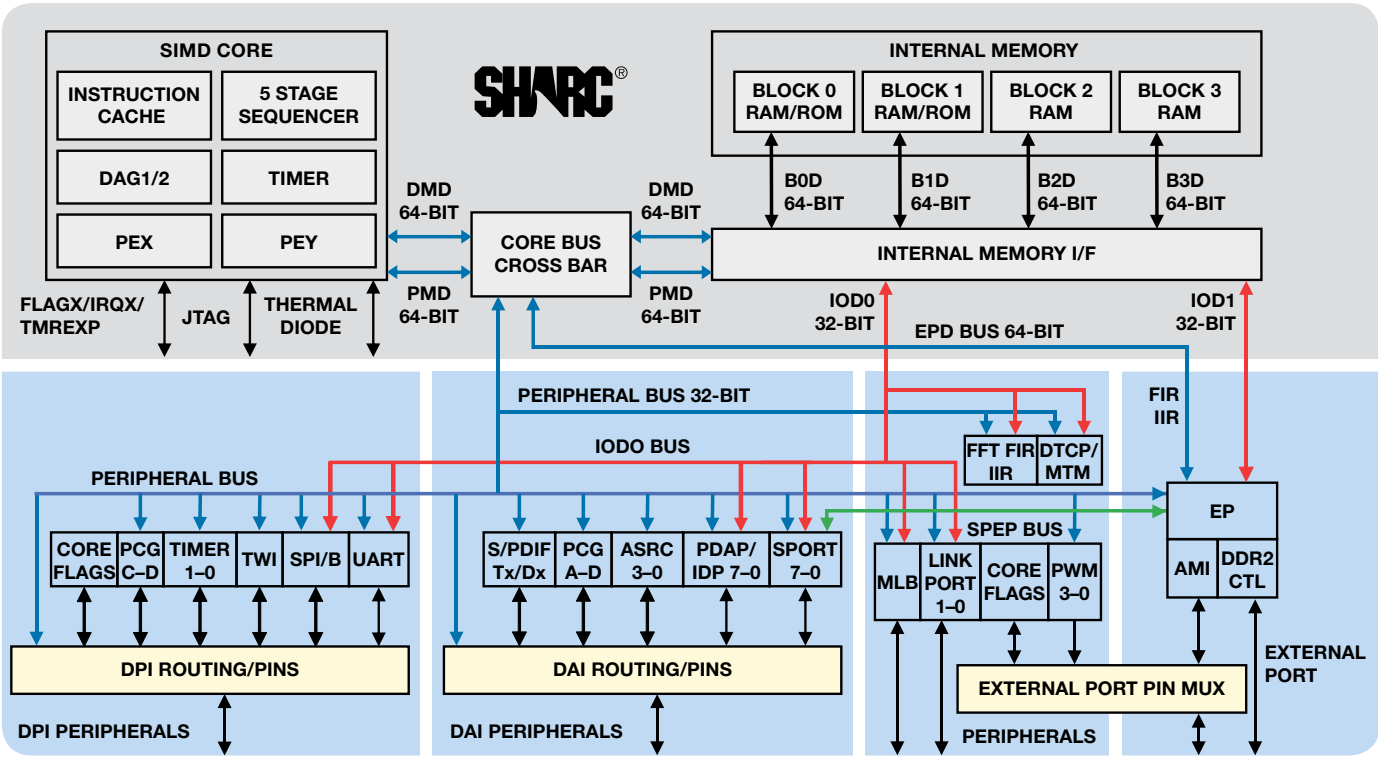

FPGA Motor Control Solutions

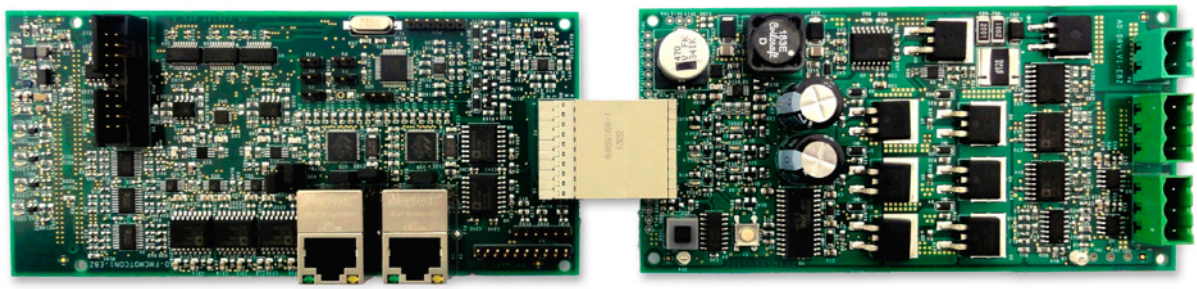

AD-FMCMOTCON1 evaluation board kit.

The AD-FMCMOTCON1-EBZ evaluation board kit offers designers a complete motor drive system demonstrating efficient and high dynamic control of 3-phase PMSM and induction motors. The kit consists of two boards: a controller board, designed to connect to any Xilinx FPGA or SoC platforms with FPGA mezzanine card (FMC) connectors, and a drive board as shown above.

Complete drive system demonstrating efficient control of multiple motor types:

- High quality power sources
- Reliable power, control, and feedback signals isolation
- Accurate measurement of motor current and voltage signals
- High speed interfaces for control signals to allow fast controller response
- Industrial Ethernet high speed interfaces suitable for communication protocols like PROFINET, EtherCAT, and Powerlink
- Flexible control with FPGA/SoC interface

The hardware is provided with example reference designs showing how to use the control solution with Xilinx FPGAs/SoCs and Simulink from MathWorks. Additionally, the system can be extended with the AD-DYNO1-EBZ Analog Devices dynamometer, which is a dynamically adjustable load that can be used to test real-time motor control performance.

ADI Reference Design Framework

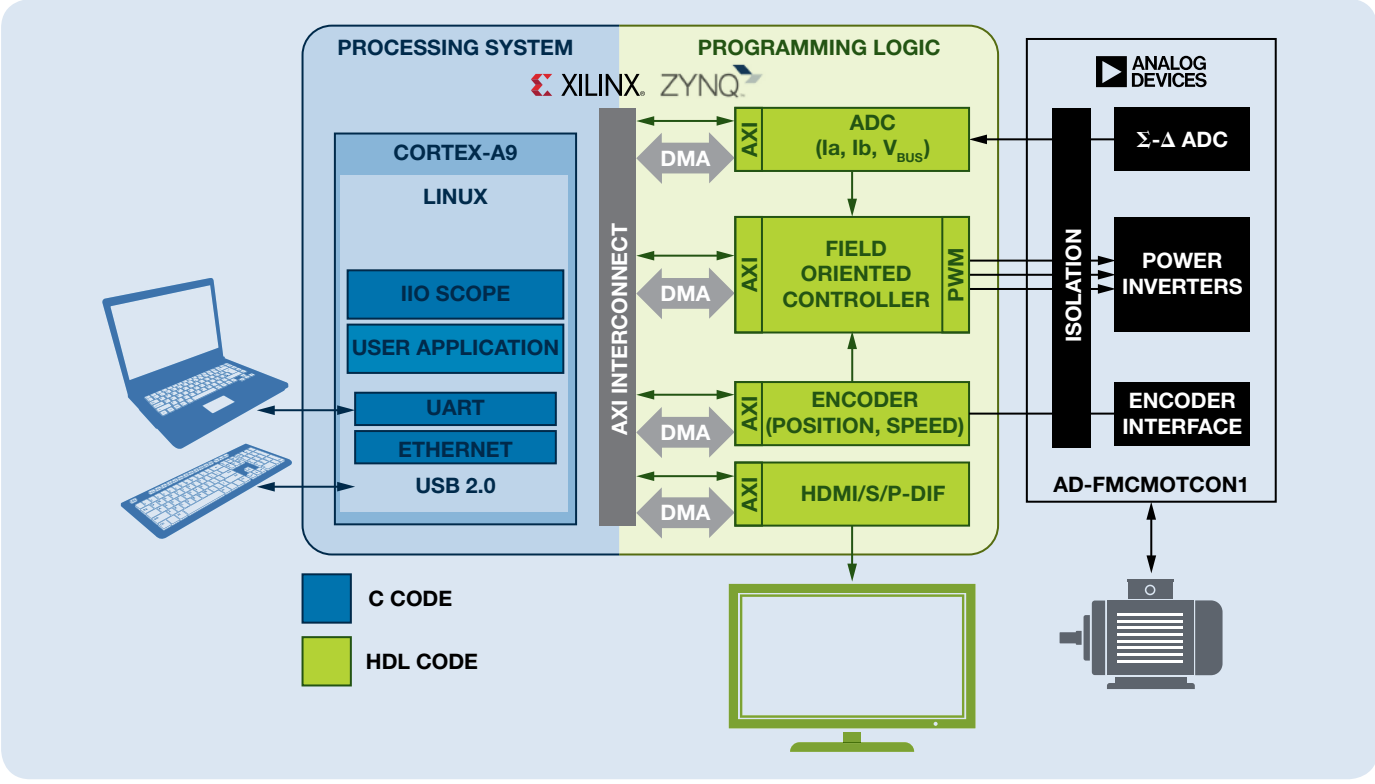

Current Sense Amplifiers

Current sense amplifiers are used when a shunt resistor is placed in the high side or low side and high accuracy over temperature is required in harsh environments. In motor control, normally the bidirectional capability will be needed. In order to build fast and accurate control loops, the step response time and common-mode voltage step immunity are critical.

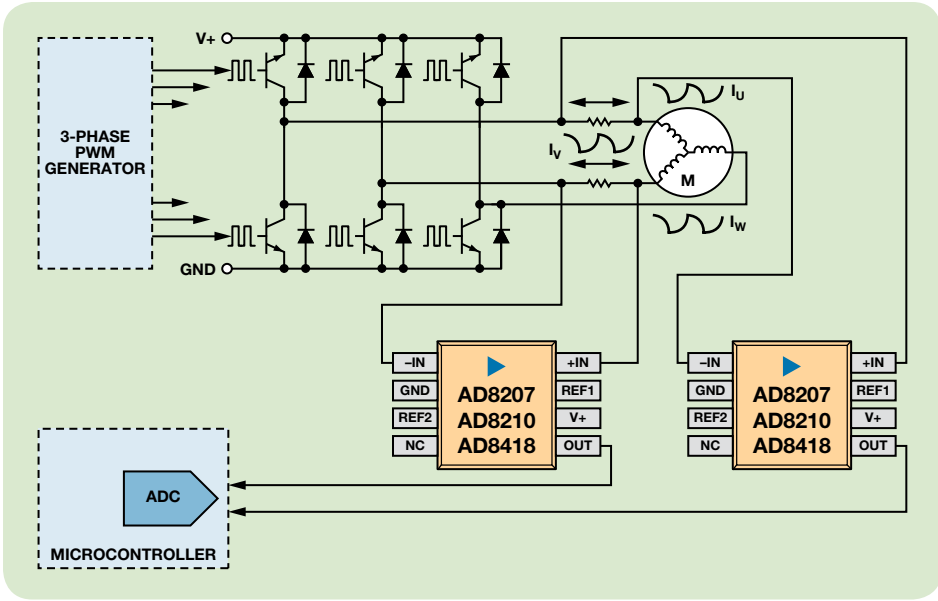

Part Number	Input CMV (V)	Gain (V/V)	Bandwidth (kHz)	Max TCV_{OS} (µV/°C)	Comments
AD8205/AD8206	–2 to +65	50/20	50/100	15	
AD8207	–4 to +65	20	100	1	Zero drift
AD8216	0 to 65	3	3000	20	Fast output response
AD8218	4 to 80	20	500	0.5	Zero drift, low cost
AD8417/AD8418	–2 to +70	60/20	250	0.5	Zero drift, low cost
AD8210	–2 to +65	20	500	8	High precision
AD8214	5 to 65	Comparator	Propagation delay 90 ns typ	—	Current output

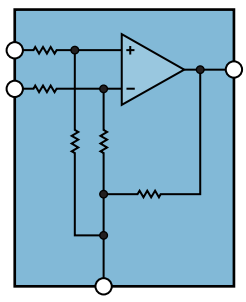

Difference amplifier.

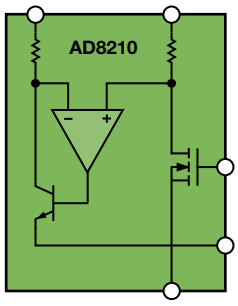

Current sense amplifier.

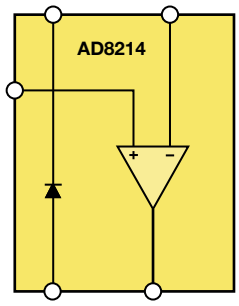

Threshold detector.

Difference Amplifiers

Difference amplifiers can be used for voltage and current sensing in motor control systems because they can reject very high common-mode voltage. They will enable the low voltage converters to interface with the high voltage industrial environment. This is especially true when functional isolation is needed. Excellent drift and CMRR are the advantages of ADI's difference amplifiers.

Part Number	CMV (±V)	CMRR (dB) Min	Gain	Gain Drift (ppm/°C) Max	V_{OS} Drift (μV/°C) Max
AD8479	600	90	1	5	10
AD629	270	86	1	10	10
AD628	120	75	0.1 to 100 adj	5 no external	8 no external

There are other cases that will need attenuation and/or level shifting in the signal conditioning. In industrial sites, anything higher than the power supply common-mode voltage will be seen by these difference amplifiers.

Part Number	CMV (±V)	CMRR (dB) Min	Gain	Gain Drift (ppm/°C) Max	I_Q/Amp (mA)	Comment
AD8275	–12.3 to +12	86	0.2	1	2.3	With level shifter
AD8276/AD8277	–2 (V_S + 0.1) to +2 (V_S – 1.5)	86	1	1	0.2	AD8277 is dual
AD8278/AD8279	–3 (V_S + 0.1) to +3 (V_S – 1.5)	80	0.5 or 2	1	0.2	AD8279 is dual
AD8273/AD8274	3 (–V_S) + 4.5 to 3 (+V_S) – 4.5	77	0.5 or 2	2	2.6	AD8273 is dual

Precision Op Amps

Precision op amps are used as signal conditioning in the motor control systems. They will be used as the sensor to ADC interface, thus the rail-to-rail input and output in high linearity will be needed. They can also be used between the resolver-to-digital converter (RDC) and the resolver to provide high current in high slew rate and accuracy. Wider bandwidth amplifiers will be used to detect the fast changing current in the system.

Part Number	Power Supply (V)	Offset Voltage (μV) Max	TCV_{OS} (μV/°C) Max	Short Circuit Current (mA)	Bandwidth (MHz)	Slew Rate (V/μs)	Comment
ADA4077	10 to 30	25	0.25	22	4	1	General-purpose precision
ADA4096	3 to 30	300	1	10	0.8	0.4	General-purpose RRIO
OP279	4.5 to 12	4000	4	50	5	3	RDC driver
ADA4661	3 to 18	150	3.1	220	4	2	RDC driver
ADA4666	3 to 18	2200	3.1	220	4	2	Low cost RDC driver
AD8662	5 to 16	1000	9	19	4	3.5	RDC driver
ADA4500	2.7 to 5.5	120	5.5	26	10.1	5.5	RRIO, zero crossover
AD8602	2.7 to 5.5	500	2	30	8	5	Low cost
AD8515	1.8 to 5	6000	4 (typ)	20	5	2.7	Low cost, smaller package
AD8606	2.7 to 5.5	65	4.5	80	10	5	Low cost, smaller package
ADA4897	3 to 10	500	0.2 (typ)	135	230	120	High speed current measurement
AD8027	2.7 to 12	800	1.5 (typ)	120	190	90	High speed current measurement

Precision Voltage References

Voltage references are used as converter voltage reference or signal conditioning. Low drift and low cost parts are needed in motor control.

Part Number	Power Supply (V)	Output Voltage (V)	Max Drift (ppm/°C)	Load Current (mA)	Comment
ADR43x	Up to 18	2.048, 2.5, 3, 4.5, 4.096, 5	3	+30/–20	Low noise
ADR34xx	Up to 5.5	1.2, 2.048, 2.5, 3, 4.096, 5	8	+10/–3	Low power, small size of 6-lead SOT-23, low cost
ADR1581	5	1.25	50	N/A	Low cost, small size of 3-lead SOT-23

Reference Designs

Analog Devices reference designs enable design engineers to apply ADI's vast applications expertise quickly and with a high level of confidence toward their own design using circuits that are built and tested by the experts to ensure both performance and function. Low cost hardware allows for evaluation and rapid prototyping with several development platforms. Thorough documentation and design files ease application understanding and minimize system integration issues.

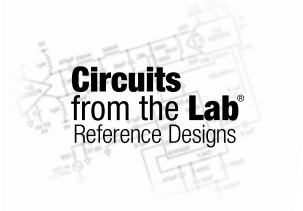

Hardware Enables

- A modular approach to system designs
- Application ready software
- Fast prototyping with FPGA and MCU

Design and Integration Files Support

- Schematic, layout, BOM downloads
- Linux code for driver development
- Simplified application integration

Documentation Provides

- Expert applications knowledge
- Understanding of circuit capabilities
- Tested and verified performance data

Circuit Note Number	Title	Applications	Products Used in This Circuit
CN0288	LVDT Signal Conditioning Circuit	Servos and robotics	AD598, AD7992, AD8615
CN0301	Universal LVDT Signal Conditioning Circuit	Servos and robotics	AD698, AD7992, AD8615
CN0303	MEMS-Based Vibration Analyzer with Frequency Response Compensation	• Servos and robotics • Drives • Application specific motor control	AD7866, AD8227, AD8615
CN0323	Magnetoresistive Angle Measurement	• Servos and robotics • Drives • Application specific motor control	AD7866, AD8227, AD8615
CN0196	H-Bridge Driver Circuit Using Isolated Half-Bridge Drivers	• Servos and robotics • Drives • Application specific motor control	ADCMP350, ADG787, ADP1720, ADuC7061, ADuM3100, ADuM7234
CN0313	EMC Compliant RS-485 Transceiver Protection Circuits	• Servos and robotics • Drives • Application specific motor control	ADM3485E
CN0218	500 V Common-Mode Voltage Current Monitor	• Servos and robotics • Drives • Application specific motor control	AD7171, AD8212, AD8605, ADR381, ADuM5402
CN0192	High Current Driver for the AD2S1210 Resolver-to-Digital Reference Signal Output	• Servos and robotics • Application specific motor control	AD2S1210, AD8662
CN0185	A Novel Analog-to-Analog Isolator Using an Isolated Sigma-Delta Modulator Isolated DC-to-DC Converter and Active Filter	Application specific motor control	AD7400A, AD8646, ADP121, ADP3301, ADuM5000
CN0116	High Voltage High Precision Current Sensing with Output Level Shifting Using the AD8210 Current Sense Amplifier and the AD8274 Difference Amplifier	Application specific motor control	AD780, AD8210, AD8274
CN0100	Measuring –48 V High-Side Current Using the AD629 Difference Amplifier AD8603 Op Amp AD780 Reference and AD7453 12-Bit ADC Single-Supply Components	Application specific motor control	AD629, AD7453, AD780, AD8603

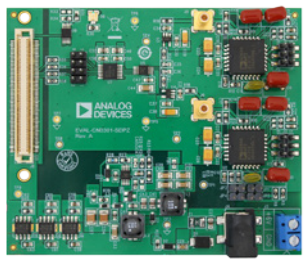

CN0301 circuit evaluation board.

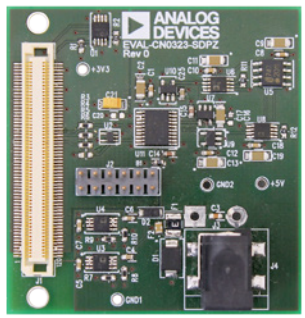

CN0323 circuit evaluation board.

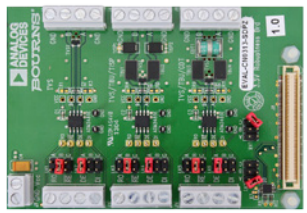

CN0313 circuit evaluation board.

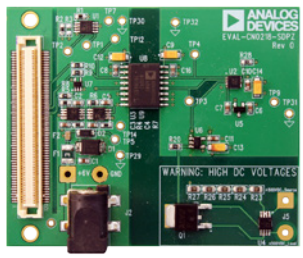

CN0218 circuit evaluation board.

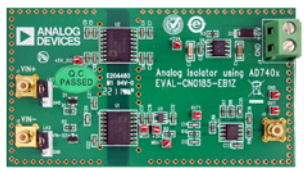

CN0185 circuit evaluation board.

Model-Based Design—Making Design Easy

System Design Value for Any Motor Control System

Model-based design was developed to help simplify the difficulties and complexities inherent in control systems designs using traditional non-automated methods. Model-based design provides the designer with a virtual design environment that enables developers to use a single model of their entire system for data analysis, model visualization, testing, validation, and eventually product deployment. Once the model is built and tested, accurate real-time software is automatically generated, saving time and reducing overall development costs as compared to traditional manual coding. Model-based design with automatic code generation can also be used in rapid prototyping, further reducing the design cycle. By its nature, model-based design provides a structure for software reuse that permits established designs to be effectively scaled up or down in complexity depending upon the desired application and reliably upgraded in a more simplistic and cost-effective manner.

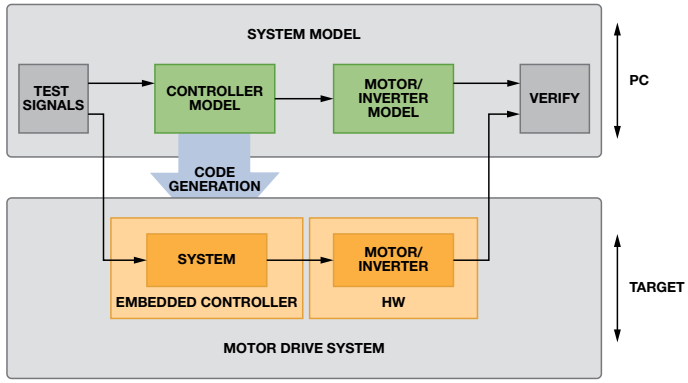

Model-based design saves valuable design resources by cutting design time and providing final designs that are more accurate and more closely approximate predesign expectations for performance, systems functionality, and features and schedule. It provides:

Benefits

- Faster design iterations that produce desired performance, functionality, and capabilities.
- Design cycles that are more predictable and result in faster product shipments
- Reduction in design, development, and implementation

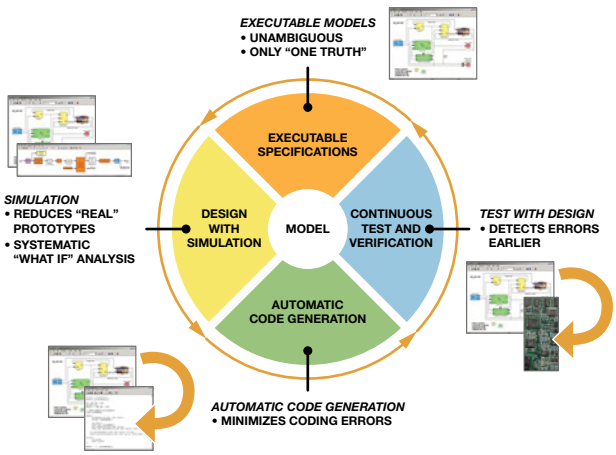

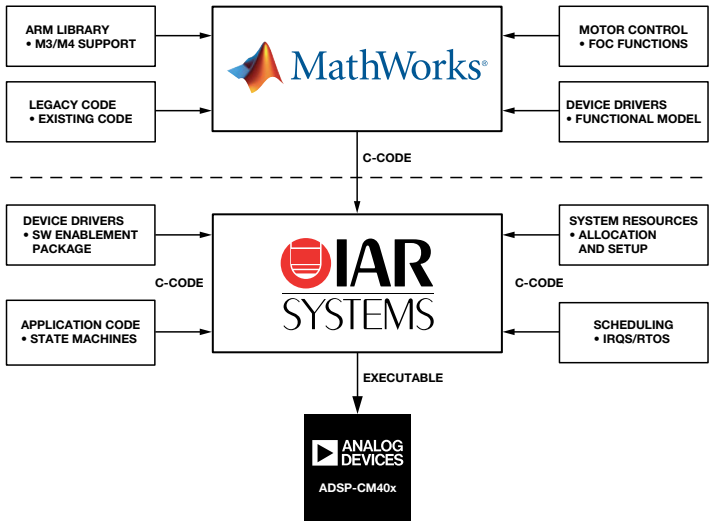

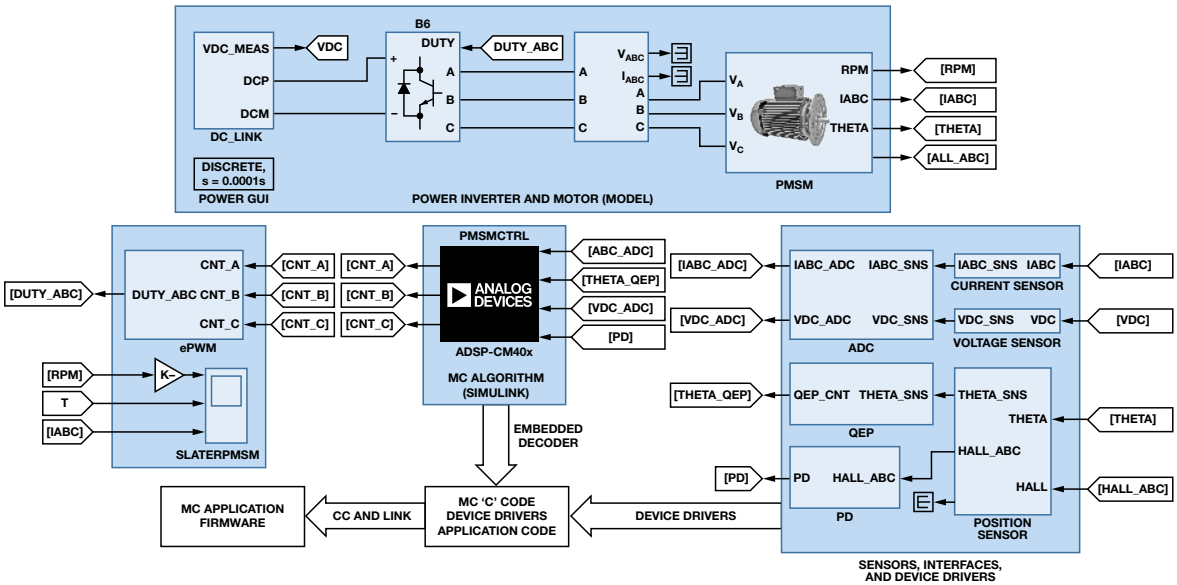

Motor Control Architectures and Solutions

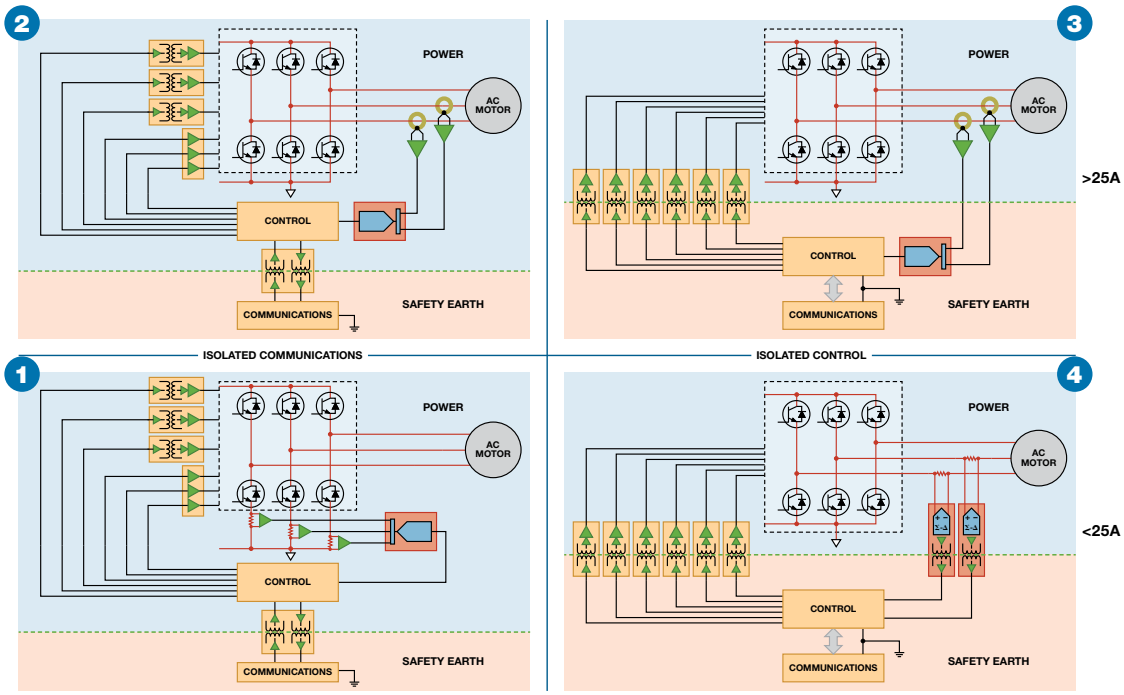

It is easy to become overwhelmed with the endless number of variations in motor control configurations. To help simplify things, Analog Devices has consolidated the number of possible motor control architectures into four fundamental categories that most systems would fall into. Depending on your selection, ADI can quickly identify and recommend the proper products and solutions for your specific design.

Zone	Configuration Description	Typical Application	Recommended Solutions
1	This configuration is traditionally used in applications where the current flow is less than 25 A and the main isolation barrier is introduced at the interface between the controller path and communication interface (controller at motor potential)	Inverters	• Digital isolation • Power management • Standard linear
2	This configuration is traditionally used in applications where the current flow is greater than 25 A and the main isolation barrier is introduced at the interface between the controller path and communication interface (controller at motor potential)	Simple function servos and drives	• Digital isolation • Power management • Standard linear • Position and current sensing • Embedded processors
3	This configuration is traditionally used in applications where the current flow is greater than 25 A and the main isolation barrier is introduced at the controller level supporting the highest isolated functionality of the control and communication boards (control at ground level)	Advanced functionality servos and drives	• Digital isolation • Power management • Standard linear • Position and current sensing • Embedded processors
4	This configuration is traditionally used in applications where the current flow is less than 25 A and the main isolation barrier is introduced at the controller level supporting the highest isolated functionality of the control and communication boards (control at ground level)	Multiaxis servo designs, with real-time Ethernet and multiaxis processing capability provided by Xilinx FPGA.	• Digital isolation • Power management • Standard linear • Position and current sensing • Embedded processors • FPGAs

Strategic Partnerships and Alliances

Analog Devices has a long and proud tradition of collaborating with the industry's leading technology companies from across the globe. ADI's products and system-level solutions have been refined and enhanced with the help of our global technology partners by leveraging their industry-leading innovations in software, embedded technologies, and system integration expertise.

ARM Holdings plc is the world's leading semiconductor intellectual property (IP) supplier. The technology ARM designs is at the heart of many of the digital electronic products sold. ARM has an innovative business model. Instead of bearing the costs associated with manufacturing, ARM licenses its technology to a network of partners, mainly leading semiconductor manufacturers and OEMs. These partners utilize ARM's designs to create smart, low energy chips suitable for modern electronic devices.

www.arm.com

Boston Engineering delivers innovative and timely solutions by utilizing its Total System Responsibility™ (TSR) philosophy to meet demanding market needs. Through interdisciplinary teams, best practice strategies, and seamless integration with client processes, Boston Engineering offers a complete solution that is both flexible and focused.

Boston Engineering fulfills an increasing demand for outsourced engineering services. From product development to information systems to engineering consulting.

www.boston-engineering.com

IAR Systems is the world's leading independent provider of software for programming of processors in embedded systems. The software is used by approximately 20,000 large and small corporations to develop products based on 8-, 16-, and 32-bit processors, mainly in the areas of industrial automation, medical devices, consumer electronics, and the automotive industry.

www.IAR.com

MathWorks® is the leading developer of mathematical computing software. Engineers and scientists worldwide rely on its products to accelerate the pace of discovery, innovation, and development. MATLAB and Simulink® are the two flagship products that MathWorks offers to customers around the world.

www.mathworks.com

Xilinx is the world's leading provider of all programmable FPGAs, SoCs, and 3D ICs. These industry-leading devices are coupled with a next-generation design environment and IP to serve a broad range of customer needs, from programmable logic to programmable systems integration.

www.xilinx.com

Third-Party Developers Program

Analog Devices third-party developers network consists of companies all over the world that provide hardware products, software products, algorithms, and design services for a wide variety of applications and markets. To learn more about this program go to

www.analog.com/en/third-party-developers/processors-DSP/content/search.html

Online Tools And Resources

To learn more about products, signal chain solutions, and technical expertise offered by Analog Devices to help engineers meet today's motor control design challenges, visit *www.analog.com/motorcontrol*.

Signal Chain Designer— *www.analog.com/signalchaindesigner*

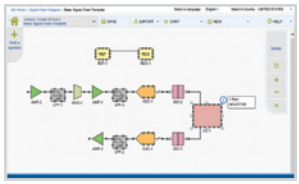

Signal Chain Designer™ is an advanced product selection and recommendation toolset, bringing together a powerful search engine, verified product recommendations, tested application circuits, integrated Analog Filter Wizard™ and Photodiode Wizard,™ and connection to other Analog Devices engineering tools to provide an easy to use, one stop circuit builder for design engineers.

Analog Filter Wizard— *www.analog.com/filterwizard*

This online tool simplifies the filter design process with an intuitive user interface and easily accessible tutorials and help.

ADIsimPower— *www.analog.com/adisimpower*

ADIsimPower™ is a collection of downloadable Excel spreadsheets that produce complete power designs optimized to your design goals. Get a schematic, bill of materials, and performance data customized to your specific needs in minutes.

EngineerZone® Online Support Community

Find answers to your design questions. Join our engineer community at *ez.analog.com*.

Photodiode Wizard— *www.analog.com/photodiode*

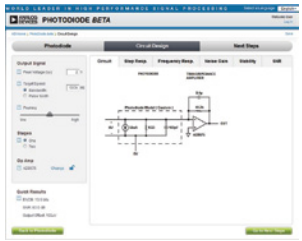

The new Photodiode Wizard speeds up the process of selecting and designing the best circuit for your particular photodiode application.

Analog Devices Wiki— *wiki.analog.com*

This wiki provides developers using Analog Devices products with software and documentation, including HDL interface code, software drivers, and reference project examples for FPGA connectivity. It also contains user guides for some Analog Devices evaluation boards to help developers get up and running fast.

Circuits from the Lab Reference Designs

For a complete list of Analog Devices Circuits from the Lab® Reference Designs for motor control designs, visit *www.analog.com/circuits*.

Quality, Reliability, and Product Life Cycle

ADI is committed to the establishment and continuous improvement of world class systems and processes aimed at satisfying our customers' evolving needs.

For information about our quality and reliability program, visit *www.analog.com/quality*.

For information about product life cycle, visit *www.analog.com/product_status_info*.

Analog Devices, Inc.
Worldwide Headquarters
Analog Devices, Inc.
One Technology Way
P.O. Box 9106
Norwood, MA 02062-9106
U.S.A.
Tel: 781.329.4700
(800.262.5643,
U.S.A. only)
Fax: 781.461.3113

Analog Devices, Inc.
Europe Headquarters
Analog Devices, Inc.
Wilhelm-Wagenfeld-Str. 6
80807 Munich
Germany
Tel: 49.89.76903.0
Fax: 49.89.76903.157

Analog Devices, Inc.
Japan Headquarters
Analog Devices, KK
New Pier Takeshiba
South Tower Building
1-16-1 Kaigan, Minato-ku,
Tokyo, 105-6891
Japan
Tel: 813.5402.8200
Fax: 813.5402.1064

Analog Devices, Inc.
Asia Pacific Headquarters
Analog Devices
5F, Sandhill Plaza
2290 Zuchongzhi Road
Zhangjiang Hi-Tech Park
Pudong New District
Shanghai, China 201203
Tel: 86.21.2320.8000
Fax: 86.21.2320.8222

I²C refers to a communications protocol originally developed by Philips Semiconductors (now NXP Semiconductors).

©2014 Analog Devices, Inc. All rights reserved. Trademarks and registered trademarks are the property of their respective owners.

Printed in the U.S.A. BR12333-3.5-8/14(A)